# Dell™ Latitude™ D600 Service Manual


Before You Begin
System Components
Memory Module, Mini PCI Card, and Modules
Reserve Battery
Hard Drive
Keyboard
Display Assembly and Display Latch
Palm Rest
Docking Doors
Fan
Bluetooth™ Card
Microprocessor Thermal-Cooling Assembly
Microprocessor Module
Flashing the BIOS
Speakers
Base Latch
Modem
System Board
Pin Assignments for I/O Connectors
Mini Recommended Spares List


---

## Notes, Notices, and Cautions

**NOTE:** A NOTE indicates important information that helps you make better use of your computer.

**NOTICE:** A NOTICE indicates either potential damage to hardware or loss of data and tells you how to avoid the problem.

**CAUTION: A CAUTION indicates a potential for property damage, personal injury, or death.**

---


**Information in this document is subject to change without notice.**
**© 2003 Dell Inc. All rights reserved.**

Reproduction in any manner whatsoever without the written permission of Dell Inc. is strictly forbidden.

Trademarks used in this text: *Dell*, the *DELL* logo, and *Latitude* are trademarks of Dell Inc.; *Intel* is a registered trademark of Intel Corporation; *Bluetooth* is a trademark owned by Bluetooth SIG, Inc. and is used by Dell Inc. under license.

Other trademarks and trade names may be used in this document to refer to either the entities claiming the marks and names or their products. Dell Inc. disclaims any proprietary interest in trademarks and trade names other than its own.



**Model PP05L**

**September 2009 Rev. A03**

Back to Contents Page

# Before You Begin

**Dell™ Latitude™ D600 Service Manual**


- Preparing to Work Inside the Computer
- Recommended Tools
- Computer Orientation
- Screw Identification


---

## Preparing to Work Inside the Computer

**CAUTION: Many repairs may only be done by a certified service technician. You should only perform troubleshooting and simple repairs as authorized in your product documentation, or as directed by the online or telephone service and support team. Damage due to servicing that is not authorized by Dell is not covered by your warranty. Read and follow the safety instructions that came with the product.**

**CAUTION: To prevent static damage to components inside your computer, discharge static electricity from your body before you touch any of your computer's electronic components. You can do so by touching an unpainted metal surface.**

**CAUTION: Handle components and cards with care. Do not touch the components or contacts on a card. Hold a card by its edges or by its metal mounting bracket. Hold a component such as a microprocessor by its edges, not by its pins.**

**NOTICE:** To avoid damaging the computer, perform the following steps before you begin working inside the computer.

1. Ensure that the work surface is flat and clean to prevent scratching the computer cover.
2. Save any work in progress and exit all open programs.
3. Turn off the computer and all attached devices.

**NOTE:** Ensure that the computer is off and not in a power management mode. If you cannot shut down the computer using the computer operating system, press and hold the power button for 4 seconds.

4. If the computer is connected to a docking station, undock it.
5. Disconnect the computer from the electrical outlet.
6. To avoid possible damage to the system board, wait 10 to 20 seconds and then disconnect any attached devices.
7. Disconnect all other external cables from the computer.
8. Remove any installed PC Cards from the PC Card slot.
9. Close the display and turn the computer upside down on a flat work surface.

**NOTICE:** To avoid damaging the system board, you must remove the main battery before you service the computer.

10. Slide and hold the battery-bay latch release on the bottom of the computer, and then remove the battery from the bay.

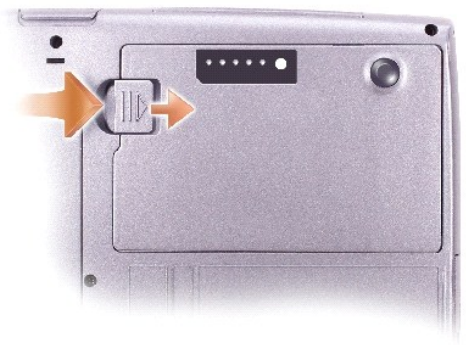

11. Remove any installed memory modules, Mini PCI cards, and modules, including a second battery if one is installed.
12. Remove the hard drive.

---

## Recommended Tools

The procedures in this manual require the following tools:

- #1 Phillips screwdriver
- ¼-inch flat-blade screwdriver
- Small plastic scribe
- Flash BIOS update program floppy disk or CD

---

## Computer Orientation

| | |
|---|---|
| 1 | back |
| 2 | right |
| 3 | front |
| 4 | left |

---

## Screw Identification

When you are removing and replacing components, photocopy "Screw Identification" as a tool to lay out and keep track of the screws. The placemat provides the number of screws and their sizes.

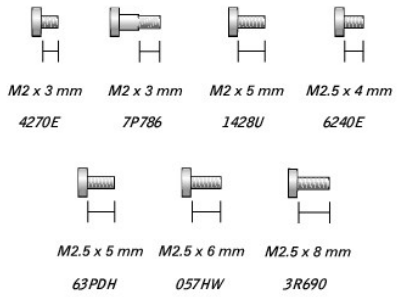


| | | |
|---|---|---|
| Optional Module:<br>(1 each)<br>M2 x 3 mm<br>7P786 | Hard Drive:<br>(1 each)<br>M2.5 x 5 mm<br>63PDH | Keyboard:<br>(2 each)<br>M2.5 x 6 mm<br>057HW |
| Display Assembly:<br>(3 each)<br>M2.5 x 6 mm<br>057HW | Display Bezel:<br>(6 each)<br>M2 x 5 mm<br>1428U | Display Panel:<br>(4 each)<br>M2 x 3 mm<br>7P786 |
| Display Latch:<br>(2 each)<br>M2.5 x 4 mm<br>6240E | Palm Rest:<br>(3 each)<br>M2 x 3 mm<br>4270E<br>(9 each) | Fan:<br>(2 each)<br>M2.5 x 8 mm<br>3R690 |

| | | |
|---|---|---|
| | <br>M2.5 x 8 mm<br>3R690 | |
| Speakers:<br><br>(1 each)<br><br> <br>M2.5 x 4 mm<br>6240E<br><br>(1 each)<br><br> <br>M2.5 x 8 mm<br>3R690 | Modem:<br><br>(1 each)<br><br> <br>M2 x 3 mm<br>4270E | System Board:<br><br>(1 each)<br><br> <br>M2.5 x 4 mm<br>6240E<br><br>(1 each)<br><br> <br>M2.5 x 8 mm<br>3R690<br><br>(4 each)<br><br> <br>M2 x 3 mm<br>4270E |

Back to Contents Page

Back to Contents Page

# Flashing the BIOS

**Dell™ Latitude™ D600 Service Manual**

1. Ensure that the AC adapter is plugged in and that the main battery is installed properly.

**NOTE:** If you use a BIOS update program CD to flash the BIOS, set up the computer to boot from a CD before inserting the CD.

2. Insert the BIOS update program floppy disk or CD, and turn on the computer.

   Follow the instructions that appear on the screen. The computer continues to boot and updates the new BIOS. When the flash update is complete, the computer will automatically reboot.

3. Press F2 during POST to enter the system setup program.
4. Press Alt and F to reset the computer defaults.
5. Press Esc Suspend, select **Save changes and reboot**, and press Enter to save configuration changes.
6. Remove the flash BIOS update program floppy disk or CD from the drive and restart the computer.

---

Back to Contents Page

Back to Contents Page

# Bluetooth™ Card

**Dell™ Latitude™ D600 Service Manual**

**CAUTION: Before performing the following procedures, read the safety instructions in your *System Information Guide*.**

**NOTICE:** To avoid electrostatic discharge, ground yourself by using a wrist grounding strap or by periodically touching an unpainted metal surface (such as the back panel) on the computer.

1. Follow the instructions in "Preparing to Work Inside the Computer."
2. Remove the keyboard.
3. Remove the display assembly.
4. Remove the palm rest.
5. Remove the Bluetooth card by pulling it straight up from the system board connector.

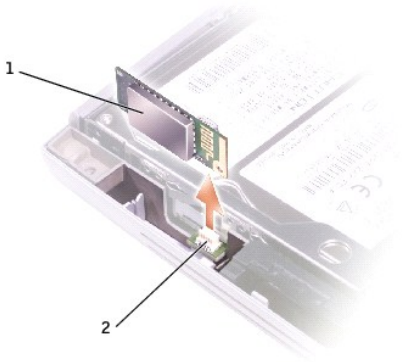


| | | |
|---|---|---|
| 1 | Bluetooth card | 1U746 |
| 2 | system board connector | |

Back to Contents Page

Back to Contents Page

# Microprocessor Module

**Dell™ Latitude™ D600 Service Manual**

## Removing the Microprocessor Module

**CAUTION: Before performing the following procedures, read the safety instructions in your *System Information Guide*.**

**NOTICE:** To avoid electrostatic discharge, ground yourself by using a wrist grounding strap or by periodically touching an unpainted metal surface (such as the back panel) on the computer.

**NOTICE:** Do not touch the processor die. Press and hold the microprocessor down on the substrate on which the die is mounted while turning the cam screw to prevent intermittent contact between the cam screw and microprocessor.

**NOTICE:** To avoid damage to the microprocessor, hold the screwdriver so that it is perpendicular to the microprocessor when turning the cam screw.

1. Follow the instructions in "Preparing to Work Inside the Computer."
2. Remove the keyboard.

**NOTICE:** To ensure maximum cooling for the microprocessor, do not touch the heat transfer areas on the microprocessor thermal-cooling assembly. The oils in your skin reduce the heat transfer capability of the thermal pads.

3. Remove the microprocessor thermal-cooling assembly.

**NOTICE:** When removing the microprocessor module, pull the module straight up. Be careful not to bend the pins on the microprocessor module.

4. To loosen the ZIF socket, use a small, flat-blade screwdriver and rotate the ZIF-socket cam screw counterclockwise until it comes to the cam stop.

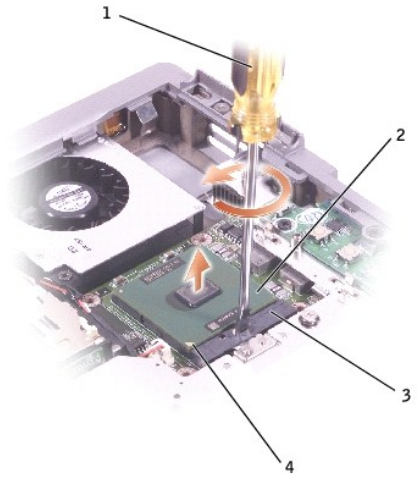


| | |
|---|---|
| 1 | screwdriver (perpendicular to microprocessor) |
| 2 | ZIF-socket cam screw |
| 3 | ZIF socket |
| 4 | pin-1 corner |

**NOTE:** The ZIF-socket cam screw secures the microprocessor to the system board. Take note of the arrow on the ZIF-socket cam screw.

**NOTE:** See Mini RSL for microprocessor part numbers.

5. Lift out the microprocessor module.

## Installing the Microprocessor Module

**NOTICE:** Ensure that the cam lock is in the fully open position before seating the microprocessor module. Seating the microprocessor module properly in the ZIF socket does not require force.

**NOTICE:** A microprocessor module that is not properly seated can result in an intermittent connection or permanent damage to the microprocessor and ZIF socket.

1. Align the pin-1 corner of the microprocessor module with the pin-1 corner of the ZIF socket, and insert the microprocessor module.

**NOTE:** The pin-1 corner of the microprocessor module has a triangle that aligns with the triangle on the pin-1 corner of the ZIF socket.

**NOTICE:** You must position the microprocessor module correctly in the ZIF socket to avoid permanent damage to the module and the socket.

When the microprocessor module is correctly seated, all four corners are aligned at the same height. If one or more corners of the module are higher than the others, the module is not seated correctly.

2. Tighten the ZIF socket by turning the cam screw clockwise to secure the microprocessor module to the system board.
3. Replace the other computer parts you removed earlier in this procedure.
4. Update the BIOS using a flash BIOS update program floppy disk or CD. For instructions on how to flash the BIOS, see "Flashing the BIOS."

---

Back to Contents Page

Back to Contents Page

# Display Assembly and Display Latch

**Dell™ Latitude™ D600 Service Manual**


- Display Assembly
- Display Bezel
- Display Panel
- Display Latch


---

## Display Assembly

**CAUTION: Before performing the following procedures, read the safety instructions in your *System Information Guide*.**

**NOTICE:** To avoid electrostatic discharge, ground yourself by using a wrist grounding strap or by periodically touching an unpainted metal surface (such as the back panel) on the computer.

**NOTICE:** You must remove the display assembly before you remove the palm rest.

1. Follow the instructions in "Preparing to Work Inside the Computer."
2. Remove the keyboard.
3. Open the display assembly approximately 180 degrees, and support the display assembly so that it does not open past this position.
4. Loosen the captive screw that secures the display cable to the system board, and release the cable from the four cable-routing clips.

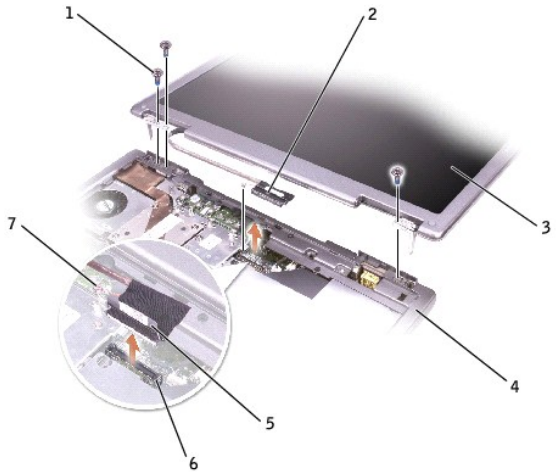


| | | |
|---|---|---|
| 1 | M2.5 x 6-mm screws (3) | 057HW |
| 2 | display cable connector | |
| 3 | display | |
| 4 | computer base | |
| 5 | pull-tab | |
| 6 | connector | |

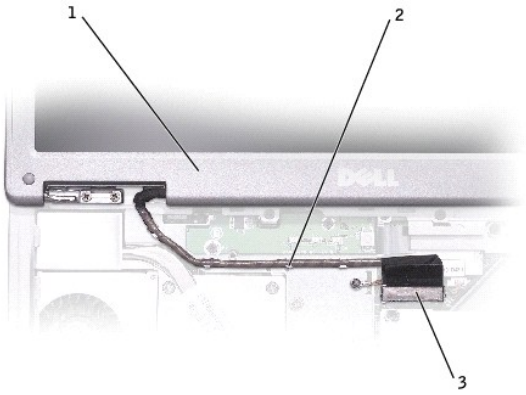


| | |
|---|---|
| 1 | display |
| 2 | cable-routing clips (4) |
| 3 | display cable connector |

5. Pull up on the pull-tab that is attached to the display cable connector to remove the connector from the system board.
6. Remove the three M2.5 x 6-mm screws.
7. Rotate the display assembly to a 90-degree angle, and lift the display assembly up and out of the computer base.

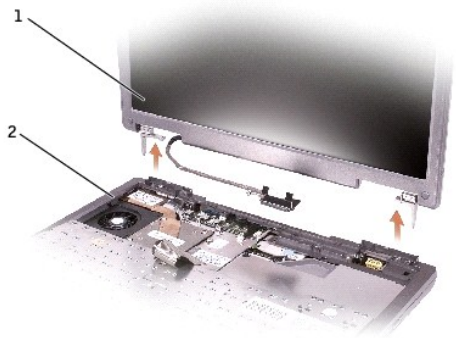


| | |
|---|---|
| 1 | display |
| 2 | computer base |

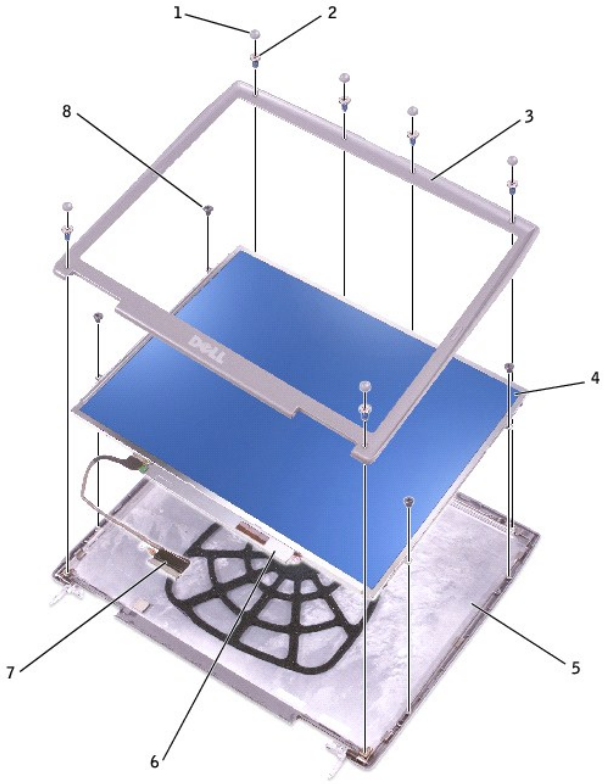


| | | | | | |
|---|---|---|---|---|---|
| 1 | display bumpers (6) | 6R933 | 5 | top cover | 8M669 |
| 2 | M2 x 5-mm screws (6) | 1428U | 6 | flex-cable retention bracket | 4270E |
| 3 | display bezel | 6M873 | 7 | flex cable | 6M871 |
| 4 | display panel | See MINI RSL | 8 | M2 x 5-mm screws (4) | |

## Display Bezel

**CAUTION: Before performing the following procedures, read the safety instructions in your *System Information Guide*.**

**NOTICE:** To avoid electrostatic discharge, ground yourself by using a wrist grounding strap or by periodically touching an unpainted metal surface (such as the back panel) on the computer.

1. Follow the instructions in "Preparing to Work Inside the Computer."
2. Remove the keyboard.
3. Remove the display assembly.
4. Use a plastic scribe to pry the six display bumpers out of the screw holes located on the front of the bezel.
5. Remove the six M2 x 5-mm screws located on the front of the bezel.

**NOTICE:** Carefully separate the bezel from the top cover to avoid damage to the bezel.

6. Starting at the bottom of the display panel (by the Dell™ logo), use your fingers to separate the bezel from the top cover by lifting the inside edge of the bezel away from the top cover.

## Display Panel

**CAUTION: Before performing the following procedures, read the safety instructions in your *System Information Guide*.**

**NOTICE:** To avoid electrostatic discharge, ground yourself by using a wrist grounding strap or by touching an unpainted metal surface on the computer.

1. Follow the instructions in "Preparing to Work Inside the Computer."
2. Remove the keyboard.
3. Remove the display bezel.
4. Remove the two M2 x 3-mm screws from each side of the display panel, and remove the display side brackets.

**NOTE:** When you replace the display side brackets, ensure that the tabs on the brackets are facing up.

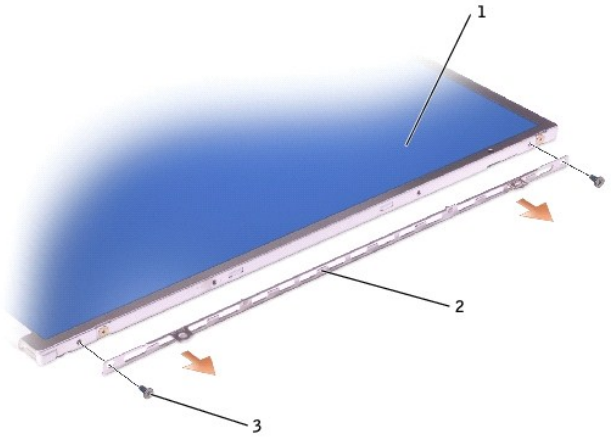


| | | |
|---|---|---|
| 1 | display panel | See MINI RSL |
| 2 | display side brackets (2) | 8T145 |
| 3 | M2 x 3-mm screws (4) | 4270E |

5. Remove the two M2 x 5-mm screws from each side of the display panel.
6. Unsnap the cable from the top cover hook, and lift the bracket out of the display assembly.
7. Lift the display panel, and rotate the display panel out of the top cover.
8. Use the pull-tab to disconnect the bottom flex-cable connector from the inverter connector.

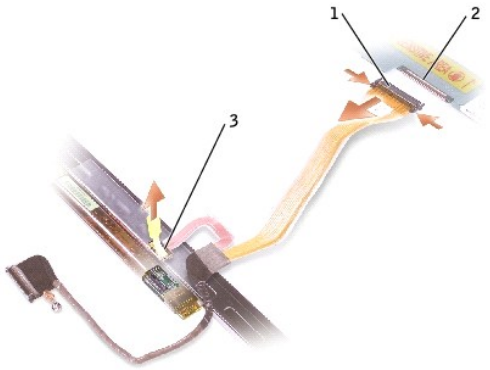


| | | |
|---|---|---|
| 1 | top flex-cable connector | 6M871 (flex cable, flex-cable connector, |

| | | |
|---|---|---|
| 2 | top display-cable connector | and pull-tab) |
| 3 | pull-tab on bottom flex-cable connector | |

9. Press in both sides of the top display cable connector, and pull the display cable connector away from the top flex-cable connector.

---

## Display Latch

**NOTICE:** Disconnect the computer and any attached devices from electrical outlets, and remove any installed batteries.

**NOTICE:** To avoid electrostatic discharge, ground yourself by using a wrist grounding strap or by touching an unpainted metal surface on the computer.

1. Remove the keyboard.
2. Remove the display assembly.
3. Remove the display bezel.
4. Remove the two M2.5 x 4-mm screws that secure the display latch bracket to the top cover.
5. Lift the display bracket out of the top cover, and then remove the display latch.

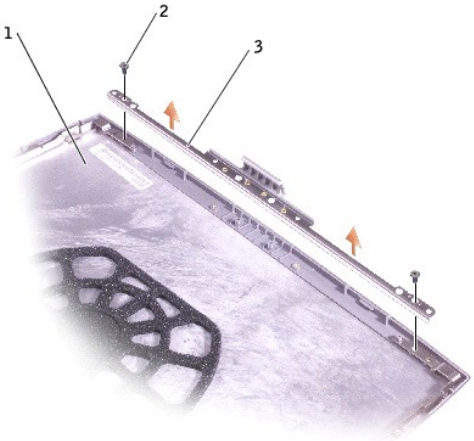


| | | |
|---|---|---|
| 1 | top cover | 8M669 |
| 2 | M2.5 x 4-mm screws (2) | 6240E |
| 3 | display latch bracket | |

---

Back to Contents Page

Back to Contents Page

# Docking Doors

**Dell™ Latitude™ D600 Service Manual**

## Removing the Docking Doors

**CAUTION: Before working inside your computer, read the safety instructions in your *System Information Guide*.**

**NOTICE:** To avoid electrostatic discharge, ground yourself by using a wrist grounding strap or by periodically touching an unpainted metal surface (such as the back panel) on the computer.

1. Follow the instructions in "Preparing to Work Inside the Computer."
2. Gently bend the docking covers and lift them away from the computer base.

## Installing the Docking Doors

Slide the side of the docking covers with the spring over the longer posts.

| | | |
|---|---|---|
| 1 | docking doors with spring | 7R316 |
| 2 | longer post | |

---

Back to Contents Page

# Fan

**Dell™ Latitude™ D600 Service Manual**

**CAUTION: Before performing the following procedures, read the safety instructions in your *System Information Guide*.**

**NOTICE:** To avoid electrostatic discharge, ground yourself by using a wrist grounding strap or by periodically touching an unpainted metal surface (such as the back panel) on the computer.

1. Follow the instructions in "Preparing to Work Inside the Computer."
2. Remove the keyboard.
3. Remove the palm rest.
4. Remove the microprocessor thermal-cooling assembly.
5. Pull straight up on the fan cable connector from the system board connector.

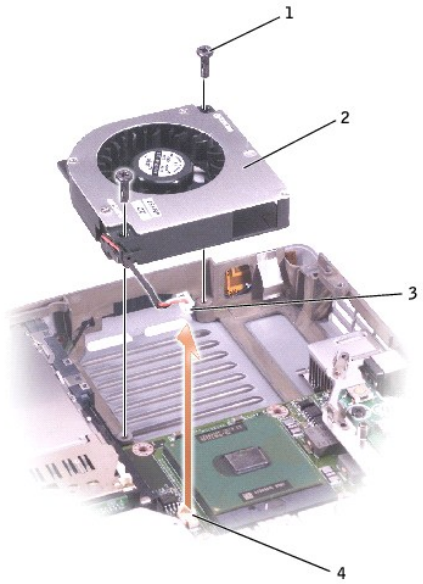


| | | |
|---|---|---|
| 1 | M2.5 x 8-mm screws (2) | 3R690 |
| 2 | fan | 4R197 |
| 3 | fan cable connector | |
| 4 | system board connector | |

6. Remove the two M2.5 x 8-mm screws from the fan, and pull the fan away from the system board.

Back to Contents Page

# Hard Drive

**Dell™ Latitude™ D600 Service Manual**

**CAUTION: If you remove the hard drive from the computer when the drive is hot, do not touch the metal housing of the hard drive.**

**CAUTION: Before working inside your computer, read the safety instructions in your *System Information Guide*.**

**NOTICE:** To prevent data loss, shut down your computer before removing the hard drive. Do not remove the hard drive while the computer is on, in standby mode, or in hibernate mode.

**NOTICE:** Hard drives are extremely fragile; even a slight bump can damage the drive.

**NOTE:** Dell does not guarantee compatibility or provide support for hard drives from sources other than Dell.

1. Follow the instructions in "Preparing to Work Inside the Computer."
2. Turn the computer over. Use a standard #1 Phillips screwdriver to remove the M2.5 x 5-mm screw.

| | | |
|---|---|---|
| 1 | M2.5 x 5-mm screw | 63PDH |

**NOTICE:** If you do not open the display before you remove your hard drive, you might permanently scratch your display.

3. Open the display approximately 1/2 inch, as shown in the following figure.

**NOTICE:** When the hard drive is not in the computer, store it in protective antistatic packaging. See "Protecting Against Electrostatic Discharge" in your *System Information Guide*."

4. Slide the hard drive out of the computer.

5. Remove the bezel screw and the bezel from the hard drive.
6. Remove the new drive from its packaging.

   Save the original packaging to use when storing or shipping the hard drive.

7. Attach the bezel to the new hard drive with the bezel screw.

**NOTICE:** If you do not open the display before you replace your hard drive, you might permanently scratch your display bezel.

8. Open the display approximately 1/2 inch.

**NOTICE:** Use firm and even pressure to slide the drive into place. If you force the hard drive into place using excessive force, you may damage the connector.

9. Press the hard drive cover down until it is fully seated in the bay, and tighten the screw.
10. Use the *Operating System* CD to install the operating system for your computer.
11. Use the *Drivers and Utilities* CD to install the drivers and utilities for your computer.

---

Back to Contents Page

Back to Contents Page

# Keyboard

**Dell™ Latitude™ D600 Service Manual**

**CAUTION: Before performing the following procedures, read the safety instructions in your *System Information Guide*.**

**NOTICE:** To avoid electrostatic discharge, ground yourself by using a wrist grounding strap or by periodically touching an unpainted metal surface (such as the back panel) on the computer.

1. Follow the instructions in "Preparing to Work Inside the Computer."
2. Turn the computer right-side up and open it.

| | |
|---|---|
| 1 | display |
| 2 | center control cover |
| 3 | computer base |

3. Remove the center control cover:
   a. Open the display all the way (180 degrees) so that it lies flat against your work surface.
   b. Starting on the right side of the computer, use a plastic scribe to pry up the center control cover. Lift it away from the computer, and lay it aside.

| | | |
|---|---|---|
| 1 | center control cover | 8M659 |

4. Remove the keyboard:

   a. Remove the two M2.5 x 6-mm screws across the top of the keyboard.

**NOTICE:** The keycaps on the keyboard are fragile, easily dislodged, and time-consuming to replace. Be careful when removing and handling the keyboard.

   a. Rotate the keyboard up and slide it forward.

   b. Hold the keyboard up and slightly forward to allow access to the keyboard connector.

   c. Pull up on the keyboard connector tab to disconnect the keyboard connector from the system board.

5. To replace the keyboard, perform the steps used to remove the keyboard in reverse order.

**NOTE:** When you replace the keyboard, ensure that the keyboard tabs are completely in place to avoid scratching the palmrest.

| | | |
|---|---|---|
| 1 | M2.5 x 6-mm screws (2) | 057HW |
| 2 | keyboard tabs | |
| 3 | palm rest | |

Back to Contents Page

Back to Contents Page

# Base Latch

**Dell™ Latitude™ D600 Service Manual**

**CAUTION: Before performing the following procedures, read the safety instructions in your *System Information Guide*.**

**NOTICE:** To avoid electrostatic discharge, ground yourself by using a wrist grounding strap or by periodically touching an unpainted metal surface (such as the back panel) on the computer.

1. Follow the instructions in "Preparing to Work Inside the Computer."
2. Remove the hard drive.
3. Remove the keyboard.
4. Remove the display assembly.
5. Remove the palm rest.
6. Remove the speakers.
7. Pull the base latch straight up and away from the computer base.

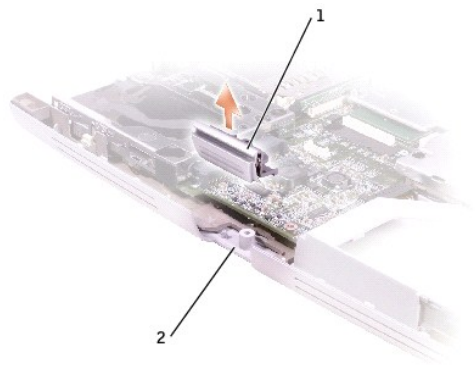


| | | |
|---|---|---|
| 1 | base latch | 1N487 |
| 2 | computer base | |

Back to Contents Page

Back to Contents Page

# Mini Recommended Spares List

**Dell™ Latitude™ D600 Service Manual**

**NOTE:** The part numbers listed below are subject to change.

| **Bottom Base Parts** | |
|---|---|
| N0441 | memory door |
| 7R843 | Mini PCI card door |
| N0312 | rubber foot for HDD strike zone (1) |
| 2N401 | rubber foot (3) |
| F1727 | computer base |
| 1N487 | base latch with spring (release latch for LCD) |

| **CD-ROM/CD-RW** | |
|---|---|
| 0R115 | 24X CD, D-module |
| 8P711 | 24X CD-RW, D-module |

| **DVD-ROM** | |
|---|---|
| 9P811 | 8X DVD, D-module |
| P0648 | 24X CD-RW/DVD, D-module |
| M0063 | 2X DVD+RW, +R, D-module |

| **Fan** | |
|---|---|
| 4R197 | fan |

| **Floppy Drive** | |
|---|---|
| 2R152 | floppy drive, D-module |

| **Hard Drive and Accessories** | |
|---|---|
| 8X209 | 20 G HDD |
| 8X210 | 30 G HDD |
| 8X211 | 40 G HDD |
| 7X889 | 60 G HDD |
| 7T651 | 40 G HDD, D-module, second HDD (HDD and D-MOD housing) |
| | |
| 0R854 | primary HDD carrier with bezel |
| 5X488 | HDD mounting screws (4) |
| 63PDH | HDD security screw (1) |
| 8267R | HDD connector |
| | |
| 4P124 | D-MOD housing only (No HDD) |

| **Keyboard** | |
|---|---|
| D1005 | service kit, United States, dual pointing |
| 8M659 | center control cover |
| 057HW | M2.5 x 6-mm screw |

| **LCD Display Assembly** | |
|---|---|
| D1001 | 14.1 XGA panel with LCD cable |
| D1002 | 14.1 SXGA+ panel with LCD cable |
| 3Y530 | display latch, D600 |
| 6M873 | display bezel |

| | |
|---|---|
| 8M669 | top cover, 14.1 inch (includes latch and hinges) |

| **Memory** | |
|---|---|
| 3Y180 | 128 MB DIMM |
| 3Y182 | 256 MB DIMM |
| 0K963 | 512 MB DIMM |
| 7N020 | 1 G DIMM |

| **Modem** | |
|---|---|
| Y0231 | Modem Daughter Card |

| **Power Source** | |
|---|---|
| 1M590 | primary battery 12.6 V, 6 cell |
| 7P806 | D-MOD second battery, 12.6 V, 6 cell |
| | |
| 3R459 | reserve battery |
| | |
| 5U092 | AC power brick only, 65 W |
| 9T215 | AC power brick only, 90 W (must be used with D-Dock and D-Port) |
| 1T831 | power cord, US, 1 m (3 ft) |
| 5T327 | power cord, US, 2 m (6 ft) |
| 4X511 | duck head power supply plug (direct to wall) |
| H0286 | rubber strap for power cord management |

| **Processors** | |
|---|---|
| 7U338 | 1.3 GHz CPU |
| 7R414 | 1.4 GHz CPU |
| 6R637 | 1.5 GHz CPU |
| 4R867 | 1.6 GHz CPU |
| 4W884 | 1.7 GHz CPU |

| **Speaker** | |
|---|---|
| 2N406 | speaker |

| **Thermal Cooling Assembly** | |
|---|---|
| 2N403 | thermal cooling assembly |

| **Wireless** | |
|---|---|
| 3X548 | TM1400 Dual-band a/b Combo Card MPCI |
| 9Y200 | Intel® Pro Wireless 2100 802.11b MPCI |
| J0846 | TM1300 802.11b/g MPCI |

---

Back to Contents Page

Back to Contents Page

# Modem

**Dell™ Latitude™ D600 Service Manual**

**CAUTION: Before performing the following procedures, read the safety instructions in your *System Information Guide*.**

**NOTICE:** To avoid electrostatic discharge, ground yourself by using a wrist grounding strap or by periodically touching an unpainted metal surface (such as the back panel) on the computer.

1. Follow the instructions in "Preparing to Work Inside the Computer."
2. Remove the keyboard.
3. Remove the display assembly.
4. Remove the palm rest.
5. Remove the M2 x 3-mm screw.

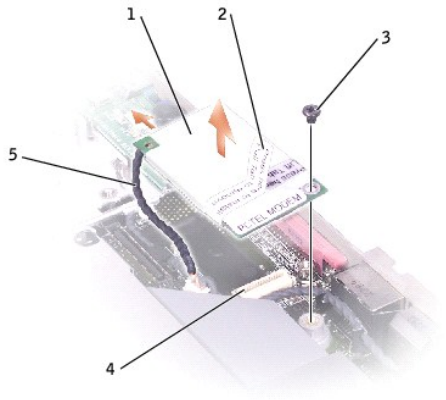


| | | | | | |
|---|---|---|---|---|---|
| 1 | modem | Y0231 | 4 | system board connector | |
| 2 | pull-tab | | 5 | modem cable | |
| 3 | M2 x 3-mm screw | 4270E | | | |

6. Disconnect the modem cable from the modem.

**NOTICE:** Do not disconnect the modem cable from the system board.

7. Pull up on the pull-tab to disconnect the modem from the system board connector.

**NOTICE:** Ensure that the modem cable is routed correctly when you replace the modem.

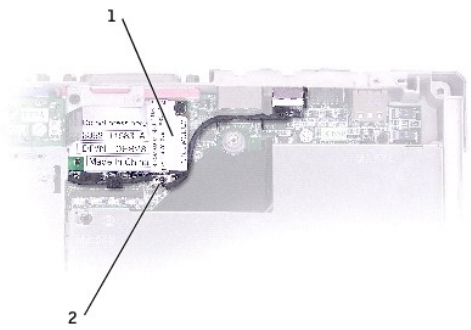


| | |
|---|---|
| 1 | modem |
| 2 | modem cable |

---

Back to Contents Page

Back to Contents Page

# Palm Rest

**Dell™ Latitude™ D600 Service Manual**

**CAUTION: Before performing the following procedures, read the safety instructions in your *System Information Guide*.**

**NOTICE:** To avoid electrostatic discharge, ground yourself by using a wrist grounding strap or by periodically touching an unpainted metal surface (such as the back panel) on the computer.

1. Follow the instructions in "Preparing to Work Inside the Computer."
2. Remove the keyboard.

**NOTICE:** You must remove the display assembly before you remove the palm rest; the display hinges pass through the back of the palm rest.

3. Remove the display assembly.
4. Remove the three M2 x 3-mm screws labeled "circle P" from the top of the palm rest.

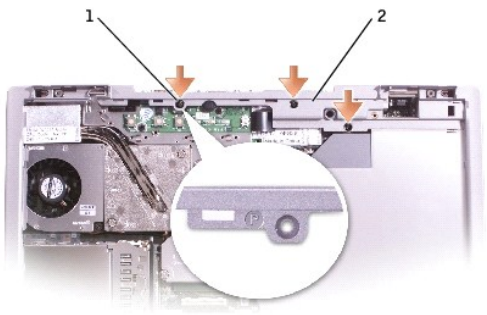


| | | |
|---|---|---|
| 1 | M2 x 3-mm screws (3) | 4270E |
| 2 | top of the palm rest | |

5. Disconnect the touch pad connector from the system board.

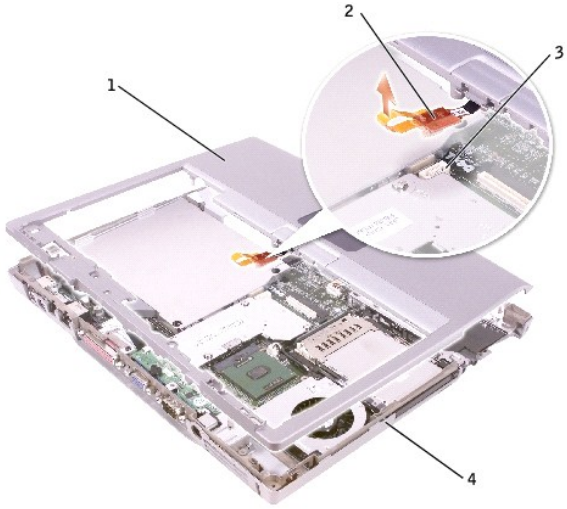


| | |
|---|---|
| 1 | back center of the palm rest |
| 2 | touch pad connector |
| 3 | system board connector |
| 4 | computer base |

6. Turn the computer over and remove the nine M2.5 x 8-mm screws.

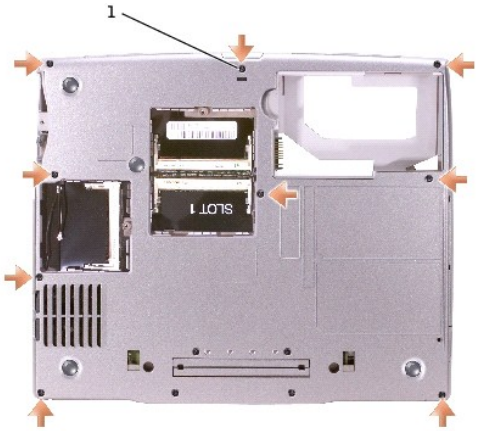


| | | |
|---|---|---|
| 1 | M2.5 x 8-mm screws (9) | 3R690 |

**NOTICE:** Carefully separate the palm rest from the computer base to avoid damage to the palm rest.

7. Starting at the back center of the palm rest, use your fingers to separate the palm rest from the computer base by lifting the inside of the palm rest while pushing in on the outside.

---

Back to Contents Page

Back to Contents Page

# Pin Assignments for I/O Connectors

**Dell™ Latitude™ D600 Service Manual**


- USB Connector
- Video Connector
- Parallel Connector


## USB Connector

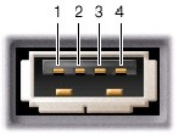


| Pin | Signal |
|---|---|
| 1 | USB5V+ |
| 2 | USBP− |
| 3 | USBP+ |
| 4 | GND |

## Video Connector

| Pin | Signal | Pin | Signal |
|---|---|---|---|
| 1 | CRT_R | 9 | 5V+ |
| 2 | CRT_G | 10 | GND |
| 3 | CRT_B | 11 | MONITOR_DETECT− |
| 4 | NC | 12 | DDC_DATA |
| 5 | GND | 13 | CRT_HS |
| 6 | GND | 14 | CRT_VS |
| 7 | GND | 15 | DDC_CLK |
| 8 | GND | | |

## Parallel Connector

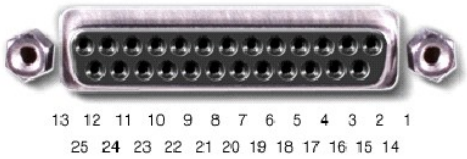


| Pin | Signal | Pin | Signal |
|---|---|---|---|
| 1 | STROBE– | 10 | ACK– |
| 2 | PD0 | 11 | BUSY |
| 3 | PD1 | 12 | PE |
| 4 | PD2 | 13 | SLCT |
| 5 | PD3 | 14 | AFD/3M– |
| 6 | PD4 | 15 | ERROR– |
| 7 | PD5 | 16 | INIT– |
| 8 | PD6 | 17 | SLIN– |
| 9 | PD7 | 18-25 | GND |

---

Back to Contents Page

Back to Contents Page

# Reserve Battery

**Dell™ Latitude™ D600 Service Manual**

**CAUTION: Before working inside your Dell™ computer, read the safety instructions in your *System Information Guide*.**

**CAUTION: To prevent static damage to components inside your computer, discharge static electricity from your body before you touch any of your computer's electronic components. You can do so by touching an unpainted metal surface.**

1. Follow the instructions in "Preparing to Work Inside the Computer."
2. Remove the battery.
3. Depress the battery latch and rotate it out to remove the reserve battery cover.

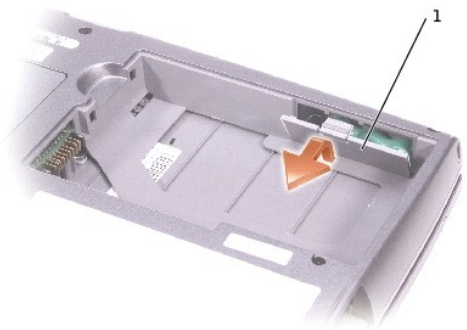


| | | |
|---|---|---|
| 1 | reserve battery cover | 6R456 |

4. Pull the reserve battery straight out of the computer base.
5. Disconnect the reserve battery cable connector from the speaker connector.

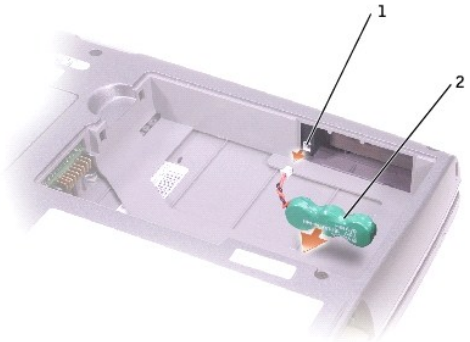


| | | |
|---|---|---|
| 1 | speaker connector | |
| 2 | reserve battery | D1004 |

6. To replace the battery, perform the steps used to remove it in reverse order.

Back to Contents Page

# Speakers

**Dell™ Latitude™ D600 Service Manual**

**CAUTION: Before performing the following procedures, read the safety instructions in your *System Information Guide*.**

**NOTICE:** To avoid electrostatic discharge, ground yourself by using a wrist grounding strap or by periodically touching an unpainted metal surface (such as the back panel) on the computer.

1. Follow the instructions in "Preparing to Work Inside the Computer."
2. Remove the keyboard.
3. Remove the display assembly.
4. Remove the palm rest.
5. Disconnect the speaker connector from the system board connector.

**NOTICE:** Handle the speakers with care to avoid damaging them.

6. Remove the M2.5 x 8-mm screw from the speakers.
7. Remove the M2.5 x 4-mm screw from the speakers.
8. Slightly pull the front of the computer away from the speakers, and remove the speakers by pulling them straight up and out of the computer base.
9. Remove the reserve battery from the speakers.

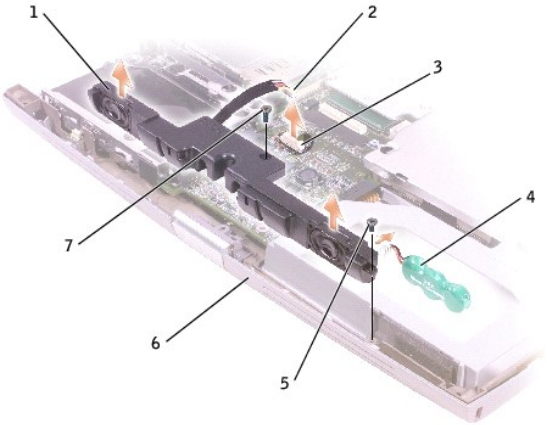


| | | | | | |
|---|---|---|---|---|---|
| 1 | speaker | 2N406 | 5 | M2.5 x 4-mm screw | 6240E |
| 2 | speaker connector | | 6 | computer base | |
| 3 | system board connector | | 7 | M2.5 x 8-mm screw | 3R690 |
| 4 | reserve battery | 3R459 | | | |

Back to Contents Page

Back to Contents Page

# System Board

**Dell™ Latitude™ D600 Service Manual**

## Removing the System Board

**CAUTION: Before performing the following procedures, read the safety instructions in your *System Information Guide*.**

**NOTICE:** To avoid electrostatic discharge, ground yourself by using a wrist grounding strap or by periodically touching an unpainted metal surface (such as the back panel) on the computer.

The system board's BIOS chip contains the Service Tag sequence, which is also visible on a barcode label on the bottom of the computer. The replacement kit for the system board includes a CD that provides a utility for transferring the Service Tag sequence to the replacement system board.

**NOTICE:** Disconnect the computer and any attached devices from electrical outlets, and remove any installed batteries.

**NOTICE:** To avoid electrostatic discharge, ground yourself by using a wrist grounding strap or by touching an unpainted metal surface on the computer.

1. Follow the instructions in "Preparing to Work Inside the Computer."
2. Remove the keyboard.
3. Remove the display assembly.
4. Remove the palm rest.
5. Remove the microprocessor thermal-cooling assembly.
6. Remove the microprocessor.
7. Remove the reserve battery cover.
8. Remove the one M2.5 x 8-mm screw and one M2.5 x 4-mm screw labeled "circle B."

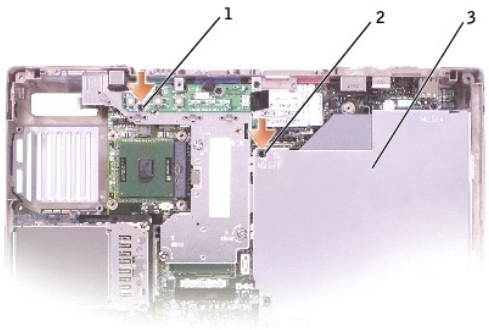


| | | |
|---|---|---|
| 1 | M2.5 x 4-mm screw | 6240E |
| 2 | M2.5 x 8-mm screw | 3R690 |
| 3 | system board | U0996 |

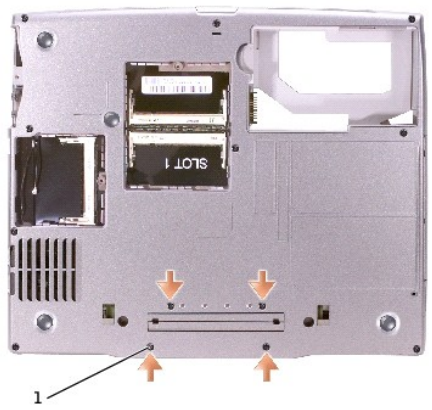


| | | |
|---|---|---|
| 1 | M2 x 3-mm screws (4) | 4270E |

9. Remove the four M2 x 3-mm screws labeled "circle B" that secure the system board to the computer base.
10. Pull out the system board starting from the front of the palm rest.

## Installing the System Board

1. Follow all of the steps in "Removing the System Board" in reverse order.

**NOTICE:** Before turning on the computer, replace all screws and ensure that no stray screws remain inside the computer. Failure to do so may result in damage to the computer.

2. Turn on the computer.

**NOTE:** After replacing the system board, enter the computer Service Tag sequence into the BIOS of the replacement system board.

3. Insert the floppy disk or CD that accompanied the replacement system board into the appropriate drive. Follow the instructions that appear on the screen.

---

Back to Contents Page

Back to Contents Page

# System Components

**Dell™ Latitude™ D600 Service Manual**

**CAUTION: Many repairs may only be done by a certified service technician. You should only perform troubleshooting and simple repairs as authorized in your product documentation, or as directed by the online or telephone service and support team. Damage due to servicing that is not authorized by Dell is not covered by your warranty. Read and follow the safety instructions that came with the product.**

**NOTICE:** Unless otherwise noted, each procedure in this document assumes that a part can be replaced by performing the removal procedure in reverse order.

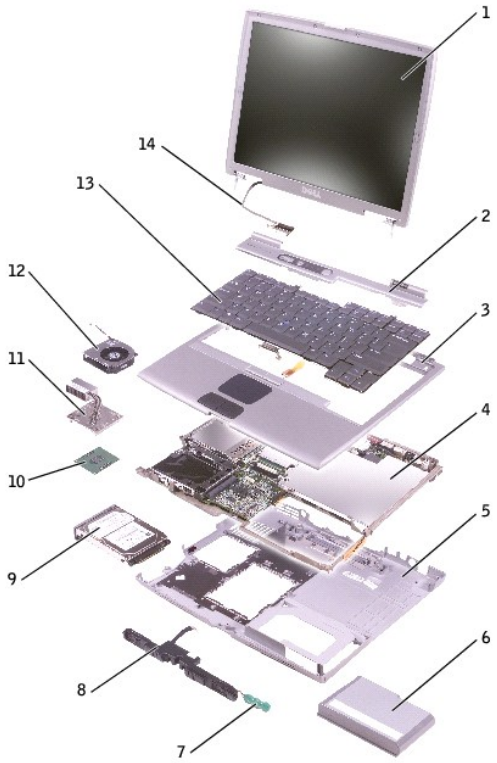


| | | | | | |
|---|---|---|---|---|---|
| 1 | display assembly | See MINI RSL | 8 | speakers | 2N406 |
| 2 | center control cover | 8M659 | 9 | hard drive | See MINI RSL |
| 3 | palm rest | 6M859 | 10 | modem | Y0231 |
| 4 | system board | U0996 | 11 | thermal cooling assembly | 2N403 |
| 5 | computer base | F1727 | 12 | fan | 4R197 |
| 6 | battery | 0R160 | 13 | keyboard | D1005 |
| 7 | reserve battery | D1004 | 14 | display cable | 6M871 |

Back to Contents Page

Back to Contents Page

# Microprocessor Thermal-Cooling Assembly

**Dell™ Latitude™ D600 Service Manual**

## Removing the Microprocessor Thermal-Cooling Assembly

**CAUTION: Before performing the following procedures, read the safety instructions in your *System Information Guide*.**

**NOTICE:** To avoid electrostatic discharge, ground yourself by using a wrist grounding strap or by periodically touching an unpainted metal surface (such as the back panel) on the computer.

**NOTICE:** Disconnect the computer and any attached devices from electrical outlets, and remove any installed batteries.

1. Follow the instructions in "Preparing to Work Inside the Computer."
2. Remove the keyboard.

**NOTE:** You can remove the microprocessor thermal-cooling assembly with the fan attached.

3. Loosen in consecutive order the four captive screws, labeled "1" through "4," that secure the microprocessor thermal-cooling assembly to the system board.

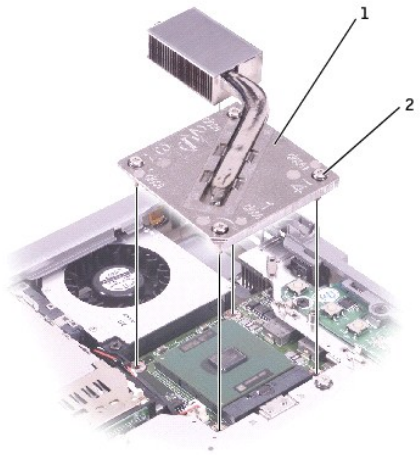


| | | |
|---|---|---|
| 1 | microprocessor thermal-cooling assembly | 2N403 |
| 2 | captive screws (4) | |

4. Rotate the microprocessor thermal-cooling assembly up toward the side of the computer and away from the system board.

## Installing the Microprocessor Thermal-Cooling Assembly

1. Place the left side of the microprocessor thermal-cooling assembly under the palm rest and rotate the assembly onto the system board.
2. Tighten the four captive screws, labeled "1" through "4," in consecutive order.

---

Back to Contents Page

Back to Contents Page

## Dell™ Latitude™ D600 Service Manual

**NOTE:** A NOTE indicates important information that helps you make better use of your computer.

**NOTICE:** A NOTICE indicates either potential damage to hardware or loss of data and tells you how to avoid the problem.

**CAUTION: A CAUTION indicates a potential for property damage, personal injury, or death.**

_____

**Information in this document is subject to change without notice.**
**© 2003 Dell Inc. All rights reserved.**

Reproduction in any manner whatsoever without the written permission of Dell Inc. is strictly forbidden.

Trademarks used in this text: *Dell*, the *DELL* logo, and *Latitude* are trademarks of Dell Inc.; *Bluetooth* is a trademark owned by Bluetooth SIG, Inc. and is used by Dell Inc. under license.

Other trademarks and trade names may be used in this document to refer to either the entities claiming the marks and names or their products. Dell Inc. disclaims any proprietary interest in trademarks and trade names other than its own.

Model PP05L

September 2009 Rev. A03

---

Back to Contents Page

Back to Contents Page

# Memory Module, Mini PCI Card, and Modules

**Dell™ Latitude™ D600 Service Manual**


- Memory Module
- Mini PCI Card
- Modules


---

## Memory Module

**CAUTION: Before working inside your Dell™ computer, read the safety instructions in your *System Information Guide*.**

**CAUTION: To prevent static damage to components inside your computer, discharge static electricity from your body before you touch any of your computer's electronic components. You can do so by touching an unpainted metal surface.**

**NOTE:** Memory modules purchased from Dell are covered under your computer warranty.

1. Follow the instructions in "Preparing to Work Inside the Computer."
2. Turn the computer over, loosen the captive screw from the memory module cover, and lift the cover.

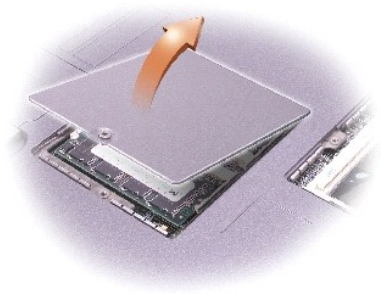

**NOTICE:** To prevent damage to the memory module connector, do not use tools to spread the inner metal tabs that secure the memory module.

3. If you are replacing a memory module, remove the existing module.

**NOTICE:** Handle memory modules by their edges, and do not touch the components on a module.

   a. Use your fingertips to carefully spread apart the securing clips on each end of the memory module connector until the module pops up.
   b. Remove the module from the connector.

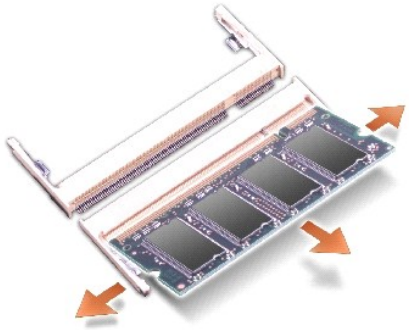

**NOTICE:** If you need to install memory modules in two connectors, install a memory module in the connector labeled "JDIM (Slot 1)" before you install a module in the connector labeled "JDIM2."

4. Ground yourself and install the new memory module:
   a. Align the notch in the module with the slot in the center of the connector.
   b. Slide the edge of the module firmly into the connector, and rotate the module down until you feel a click. If you do not feel the click, remove the module and reinstall it.

**NOTE:** If the memory module is not installed properly, the computer does not boot. No error message indicates this failure.

5. Replace the cover and screw.

**NOTICE:** If the memory module cover is difficult to close, remove the module and reinstall it. Forcing the cover to close may damage your computer.

6. Insert the battery into the battery bay, or connect the AC adapter to your computer and an electrical outlet.
7. Turn on the computer.

As the computer boots, it detects the additional memory and automatically updates the system configuration information.

---

## Mini PCI Card

If you ordered a Mini PCI card at the same time that you ordered your computer, Dell has already installed the card for you.

**CAUTION: Before working inside your computer, read the safety instructions in your *System Information Guide*.**

**CAUTION: To prevent static damage to components inside your computer, discharge static electricity from your body before you touch any of your computer's electronic components. You can do so by touching an unpainted metal surface.**

**NOTICE:** Handle components and cards by their edges, and avoid touching pins and contacts.

1. Follow the instructions in "Preparing to Work Inside the Computer."
2. Turn the computer over, and loosen the captive screw on the Mini PCI card cover.

3. Place your finger under the cover at the indentation, and lift and slide the cover open.

4. If a Mini PCI card is not already installed, go to step 5. If you are replacing a Mini PCI card, remove the existing card:
   a. Disconnect the Mini PCI card from any attached cables.
   b. Release the Mini PCI card by spreading the metal securing tabs until the card pops up slightly.
   c. Lift the Mini PCI card out of its connector.
5. Align the new Mini PCI card with the connector at a 45-degree angle, and press the Mini PCI card into the connector.
6. Connect the antenna cables from the Mini PCI card to the antenna connectors on the computer.

**NOTICE:** The connectors are keyed for correct insertion; do not force the connections.

| | |
|---|---|
| 1 | antenna cables |
| 2 | antenna connectors on card (2) |

7. Lower the Mini PCI card toward the inner tabs to approximately a 20-degree angle.

8. Continue lowering the Mini PCI card until it snaps into the inner tabs of the connector.
9. Replace the cover.

---

## Modules

Your computer ships with an optical drive installed in the module bay. However, the device security screw is not installed in the optical drive but packaged separately. When you install your device in the module bay, you can install the device security screw.

**NOTICE:** Insert devices into the module bay before you dock and turn on the computer.

**NOTE:** You do not need to install the device security screw unless you want to secure the module inside the computer for security purposes.

### If the Device Security Screw Is Not Installed

**NOTICE:** To prevent damage to devices, place them in a safe, dry place when they are not installed in the computer. Avoid pressing down on them or placing heavy objects on top of them.

1. Press the device latch release so that the latch release pops out.

| | |
|---|---|
| 1 | device latch release |

2. Pull the device by the latch release to remove the device from the module bay.

### If the Device Security Screw Is Installed

1. If the computer is connected to a docking device (docked), undock it. See the documentation that came with your docking device for instructions.

**NOTICE:** To prevent damage to devices, place them in a safe, dry place when they are not installed in the computer. Avoid pressing down on them or placing heavy objects on top of them.

2. Close the display and turn the computer over.
3. Use a #1 Phillips screwdriver to remove the M2 x 3-mm screw from the bottom of the computer.

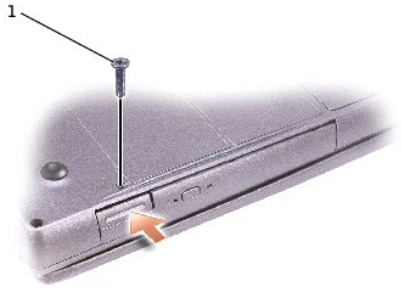


| | | |
|---|---|---|
| 1 | M2 x 3-mm screw | 7P786 |

4. Press the device latch release so that the latch release pops out.
5. Pull the device by the latch release to remove the device from the module bay.

---

Back to Contents Page